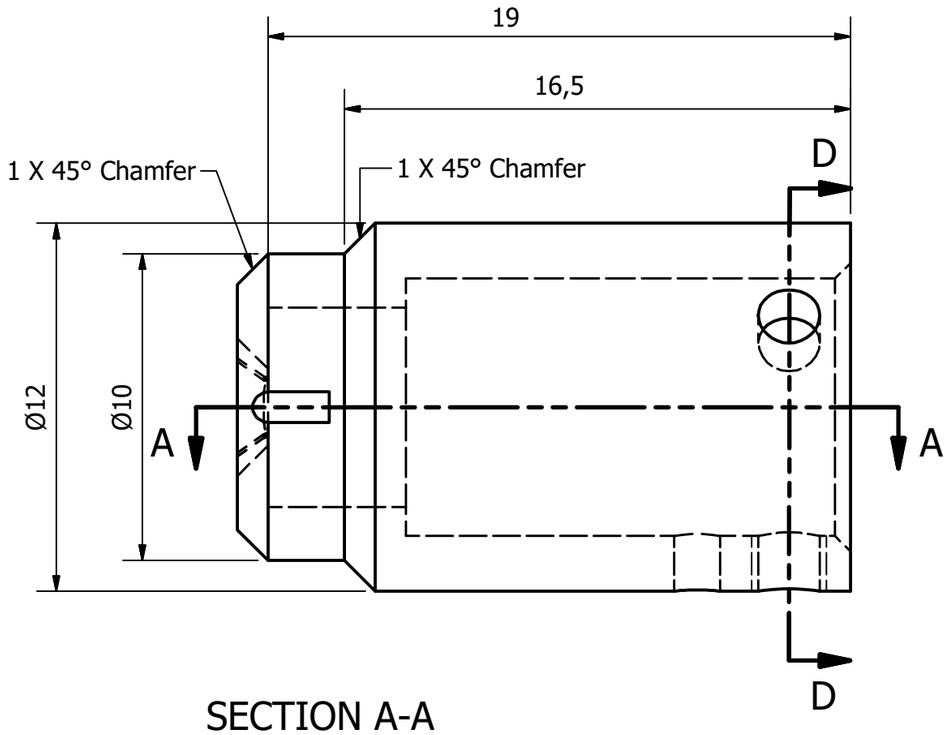

SECTION A-A
SCALE 5 : 1

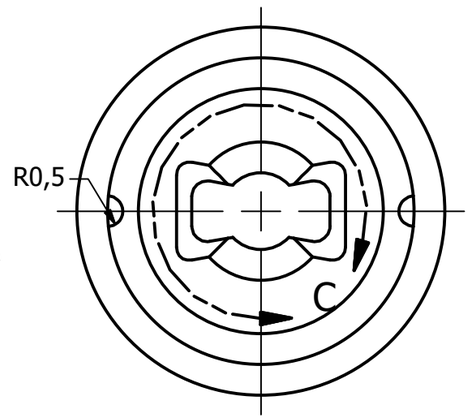

SECTION D-D
SCALE 5 : 1

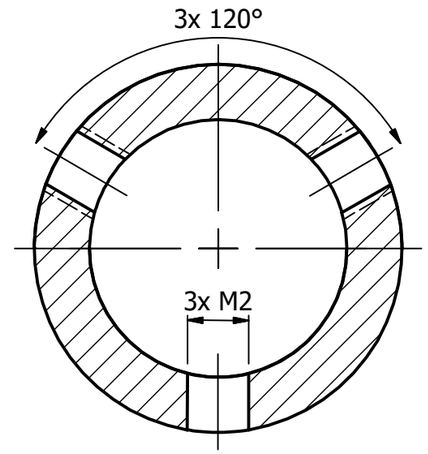

DETAIL C
SCALE 10 : 1

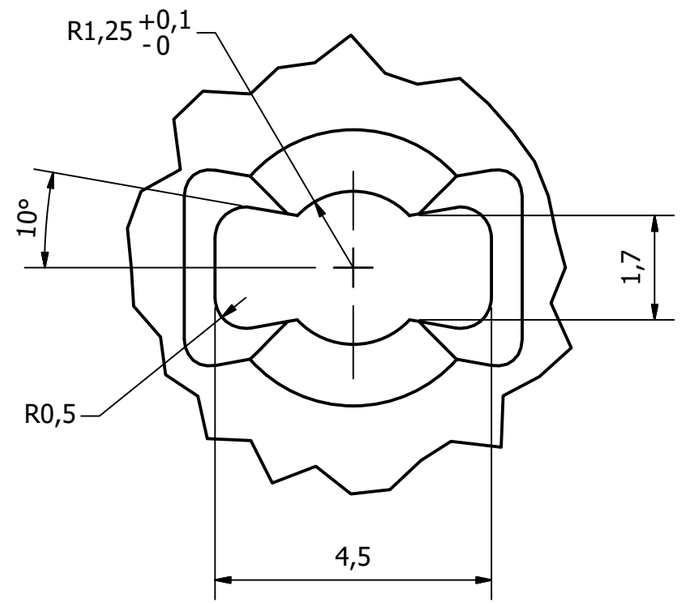

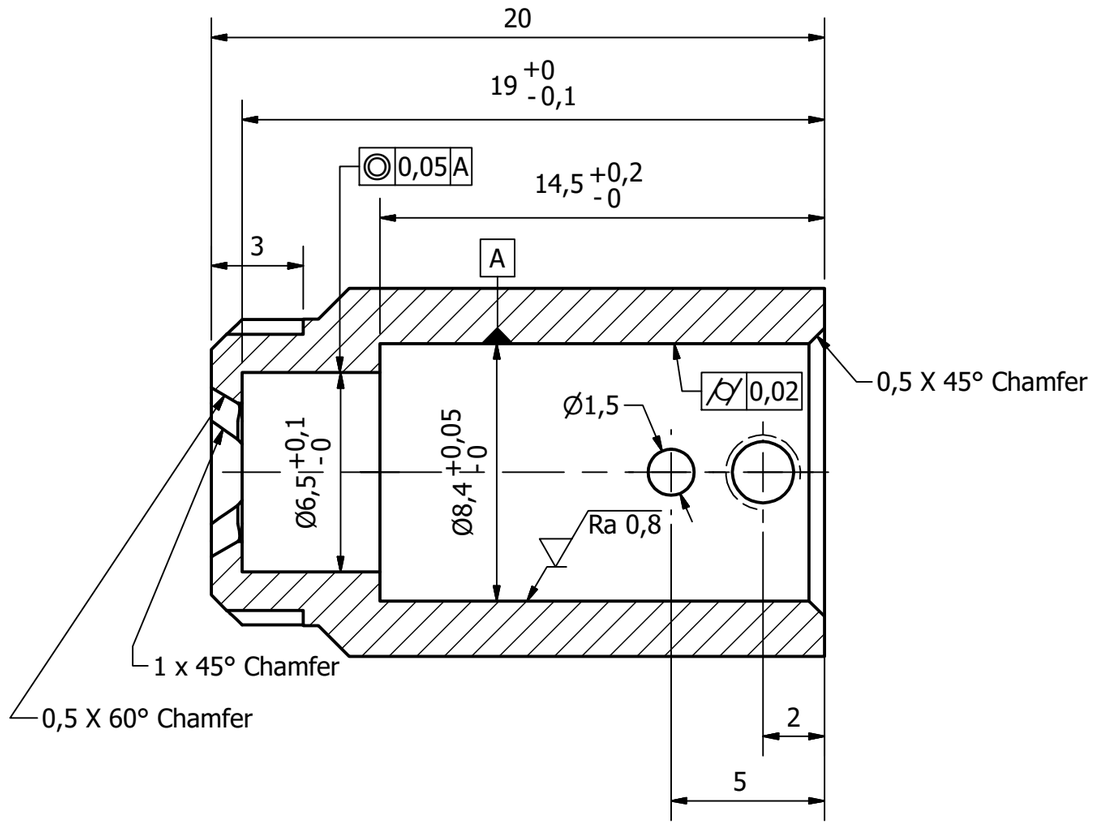

DRAWN	Zdeněk Jakub	SURFACE FINISH Ra 6,3	EDGES
DOCUMENT TYPE	Part		
ACCURACY	ISO2768-mH	TITLE	
PROJECTION		Holder_Part1	
TOLERANCE	ISO8015		
MATERIAL	1.4301	SIZE A3 / DWG NO Holder_part1_v2	REV
		SCALE 5:1	SHEET 1 OF 1